Downloaded from bcn.iums.ac.ir at 22:07 CET on Friday February 20th 2015

Estimating the Optimal Dosage of Sodium Valproate in Idiopathic Generalized Epilepsy with Adaptive Neuro-Fuzzy Inference System

Somayyeh Lotfi Noghabi[1*], Ali Vahidian Kamyad[1], Mohsen Foroughipour[2], Amir Hooshang Mohammadpour[3]

1. Department of Applied Mathematics, Faculty of Mathematics, Ferdowsi University of Mashhad, Mashhad, Iran.
2. Department of Neurology, Mashhad University of Medical Sciences, Mashhad, Iran.
3. Department of Pharmacodynamy& Toxicology, School of Pharmacy & Pharmaceutical Research Center, Mashhad University of Medical Sciences, Mashhad, Iran.

Article info:
Received: 5 February 2012
First Revision: 16 March 2012
Accepted: 1 May 2012

Key Words:
Adaptive Neuro-Fuzzy Inference System,
Idiopathic Generalized Epilepsy,
Optimal Dosage,
Sodium Valproate.

ABSTRACT

Introduction: Epilepsy is a clinical syndrome in which seizures have a tendency to recur. Sodium valproate is the most effective drug in the treatment of all types of generalized seizures. Finding the optimal dosage (the lowest effective dose) of sodium valproate is a real challenge to all neurologists. In this study, a new approach based on Adaptive Neuro-Fuzzy Inference System (ANFIS) was presented for estimating the optimal dosage of sodium valproate in IGE (Idiopathic Generalized Epilepsy) patients.

Methods: 40 patients with Idiopathic Generalized Epilepsy, who were referred to the neurology department of Mashhad University of Medical Sciences between the years 2006-2011, were included in this study. The function Adaptive Neuro-Fuzzy Inference System (ANFIS) constructs a Fuzzy Inference System (FIS) whose membership function parameters are tuned (adjusted) using either a back-propagation algorithm alone, or in combination with the least squares type of method (hybrid algorithm). In this study, we used hybrid method for adjusting the parameters.

Methods: The R-square of the proposed system was %598 and the Pearson correlation coefficient was significant ($P < 0.05$) and equal to 0.77, but theT-test was not significant ($P > 0.05$). Although the accuracy of the model was not high, it wasgood enough to be applied for treating the IGE patients with sodium valproate.

Discussion: This paper presented a new application of ANFIS for estimating the optimal dosage of sodium valproate in IGE patients. Fuzzy set theory plays an important role in dealing with uncertainty when making decisions in medical applications. Collectively, it seems that ANFIS has a high capacity to be applied in medical sciences, especially neurology.

**** Corresponding Author:***
Somayyeh Lotfi Noghabi, MSc.,
Department of Applied Mathematics, Faculty of Mathematics, Ferdowsi University of Mashhad, Mashhad, Iran.
Tel/fax:(+98-511) 882-8600
E-mail: slotfi_math@yahoo.com

Downloaded from bcn.iums.ac.ir at 22:07 CET on Friday February 20th 2015

1. Introduction

Clinicians treating individuals with chronic disorders- e.g. epilepsy, mental illness or HIV infection- often prescribe a series of treatments in order to maximize favorable outcome for the patients. This generally requires modifying the duration, dose or type of treatment over time. Due to the heterogeneity in response to treatments and the potential of relapse and side effects, selecting the best sequence of treatment for an individual presents significant challenges(Guez et al., 2008). Clinicians often rely on their clinical judgment and instinct rather than formulation of concepts related to epilepsy using mathematical terminology. Epilepsy is a clinical syndrome in which seizures have a tendency to recur. The traditional approach of a clinician to a patient with epilepsy is first to classify the epilepsy and then to formulate a treatment plan (Milton, 2010). An idiopathic syndrome can be conceptualized as a disease of its own kind, a sui generis condition. It follows that an idiopathic epilepsy syndrome:

- Consists only of recurrent epileptic seizures.
- Is not associated with structural brain lesions on MRI or abnormal neurological symptoms and/or signs interracially and implies normal neuropsychological status (Delgado-escueta et al., 1999).

Roughly speaking,Idiopathic Generalized Epilepsy (IGE) constitutes one-third of all epilepsies in the world. Sodium valproate is the most effective drug in the treatment of all types of generalized seizure with 75 percent of patients becoming seizure-free on mono-therapy (Villarreal et al., 1978; Davis et al., 1994). The aim of Anti-epileptic Drugs (AED) is to control seizure as quickly as possible with no or minimal side effect and no negative impact on the quality of life (Schmidt, 2009). Finding the optimal dosage (the lowest effective dose) of sodium valproate is a real challenge to all neurologists. The optimal dosage of any AED extremely depends on the severity of epilepsy (which is assessed by the frequency of seizure during the duration of epilepsy prior to onset of therapeutic intervention) (Collaborative Group for the Study of Epilepsy, 1992). Other factors related to the optimal dosage are the age of onset and the type of epilepsy. AEDs are taken periodically in fixed doses, titrated to reach a steady state concentration in the body. The type and the dosage of AEDs are chosen in order to reduce the frequency of seizures with the least possible-side effects. The evidence from both experimental and clinical studies suggests that AEDs may lose their efficacy during long-term use in a minority of patients (Pocock, 2006). Because of their greater predictive power than signal analysis techniques,Artificial Neural Networks (ANNs) have been used as computational tools for pattern classification including diagnosis of diseases (Baxt, 1990; Guler&Ubeyli, 2003; Ubeyli&Guler, 2003). Fuzzy set theory plays an important role in dealing with uncertainty when making decisions in medical applications. Therefore, fuzzy sets have attracted a growing attention and interest in modern information technology, production technique, decision making, pattern recognition, diagnostics, data analysis andetc. (Dubois &Prade, 1998; Kuncheva et al., 1999; Nauck& Kruse, 1999). Neuro-fuzzy systems are fuzzy systems, which use ANN theory in order to determine their properties (fuzzy sets and fuzzy rules) by processing data samples. Neuro-fuzzy systems harness the power of the two paradigms: fuzzy logic and ANNs by utilizing the mathematical properties of ANNs in tuning rule-based fuzzy systems that approximate the way human process information. A specific approach in neuro-fuzzy development is the Adaptive Neuro-Fuzzy Inference System (ANFIS), which has shown significant results in modeling nonlinear functions. In ANFIS, the membership function parameters are extracted from a data set that describes the system behavior. The ANFIS learns features in the data set and adjusts the system parameters according to a given error criterion (Jang, 1993). Successful implementation of ANFIS in biomedical engineering have been reported for classification (Usher et al., 1999; Belal et al., 2002; Guler & Ubeyli, 2004; Ubeyli & Guler, 2005 a,b), data analysis (Virant & Klun, 1999) and prediction (Kakar et al., 2005; Shahbazikhah et al., 2011; Kenar Koohi et al., 2011). In this study,based on ANFIS, a new approach was presented for estimating the optimal dosage of sodium valproate in IGE patients. The proposed technique involves training the ANFIS to estimate the optimal dosage of sodium valproate in IGE patients when the age of onset and the frequency of seizures during the epilepsy, prior to the onset of therapeutic intervention, are used as inputs. The ANFIS estimators were trained with the back-propagation gradient descent method in combination with the least squares method (hybrid algorithm).

2. Methods

2.1. Data

40 patients with Idiopathic Generalized Epilepsy according to the International League against Epilepsy (ILAE, 1981), who were referred to the neurology department of Mashhad University of Medical Sciences

Downloaded from bcn.iums.ac.ir at 22:07 CET on Friday February 20th 2015

between the years 2006-2011, were included in this study. The epilepsy diagnosis was based on medical history, clinical findings, electrophysiological reports, radiological and biochemical analysis. The recruited patients had tonic colonic seizures, controlled time less than 5 years and regular use of sodium valproate. In this study we also considered distribution of age at onset of seizures, severity of epilepsy (which is assessed by the frequency of seizures during epilepsy prior to the onset of therapeutic intervention and the optimal dosage of the drug for each patient which was determined by an expert neurologist who followed up the patients until they became seizure free for at least one and a half year. The description of attributes is shown in Table 1. The age of onset changes between 10-31 and the frequency of seizures during epilepsy prior to the onset of therapeutic intervention changes between 0-6. Seventy percent of patients were female and others were male.

Table 1. Description of attributes.

Attribute Number	Attribute Description	Minimum Value	Maximum Value	Mean Value	Standard Deviation
1	Age of onset	10	31	16.975	4.323386
2	Frequency of seizure before therapeutic intervention (per a month)	0	6	2.25	1.103607

NEUROSCIENCE

2.2. Adaptive Neuro-Fuzzy Inference System

The basic idea behind these neuro-adaptive learning techniques is very simple. These techniques provide a method for the fuzzy modeling procedure to learn information about a data set, in order to compute the membership function parameters that best allow the associated fuzzy inference system to track the given input/output data. This learning method works in a manner similar to that of neural networks. The Fuzzy Logic Toolbox function that accomplishes this membership function parameter adjustment is called ANFIS. Neuro-fuzzy computing enables one to build more intelligent decision-making systems (Aruna et al., 2003). Figure 1 shows the outline function of a neuro-fuzzy system.

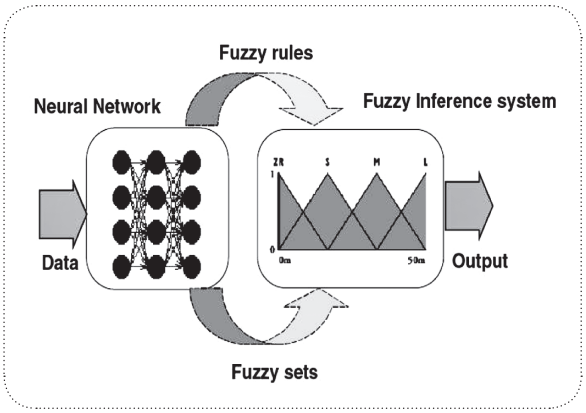

NEUROSCIENCE

Figure 1. Outline function of a neuro-fuzzy system.

The acronym ANFIS derives its name from Adaptive Neuro-Fuzzy Inference System. Using a given input/output data set, the function ANFIS constructs a fuzzy inference system (FIS) whose membership function parameters are tuned (adjusted) using either a back-propagation algorithm alone, or in combination with the least squares method (hybrid algorithm). This allows our fuzzy systems to learn from the data they are modeling. A network-type structure similar to that of a neural network,which maps inputs through input membership functions and associated parameters and then through output membership functions and associated parameters to outputs, can be used to interpret the input/output map. The parameters associated with the membership functions will change through the learning process. The computation of these parameters (or their adjustment) is facilitated by a gradient vector, which provides a measure of how well the fuzzy inference system is modeling the input/output data for a given set of parameters. Once the gradient vector is obtained, any of the several optimization routines could be applied in order to adjust the parameters so as to reduce some error measure (usually defined by the sum of the squared difference between actual and desired outputs). ANFIS uses either back-propagation or a combination of the least squares estimation and back-propagation for membership function parameter estimation.

Downloaded from bcn.iums.ac.ir at 22:07 CET on Friday February 20th 2015

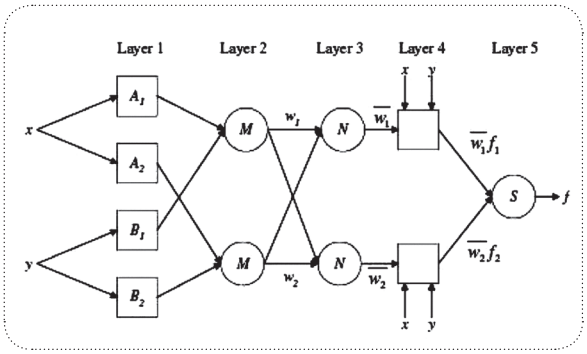

Figure 2. ANFIS architecture. NEUROSCIENCE

Some of the neuro-fuzzy systems that have been designed and have been used in various fields are GARIC, ALCON, ANFIS, NEFCON, NEFCLASS, NEFPROX, FUN, SONFIN, FINEST, etc. Generally, because of optimum in calculation and unity in output space, the Sugeno method is used by adaptive systems for making fuzzy models. These adaptive techniques can be used for customizing the membership functions. In this situation, fuzzy system can model the data better. In figure 2 ANFIS's model is shown (Ubeyli, 2008).

Layer 1: Every node i in this layer is a square node with a node function.

$$O_i^1(x) = \mu_{A_i}(x) \qquad (1)$$
$$O_i^1(y) = \mu_{B_i}(y)$$

Where x is the input to node i, A_i is the linguistic label (small, large, etc.) associated with this node function, μ_(B_i) (y)and μ_(A_i) (x)are fuzzy membership functions andi=1,2. Usually we choose μ_(A_i) (x) to be bell-shaped with maximum equal to 1 and a minimum equal to 0, such as:

$$\mu_{A_i}(x) = \exp\left(-\left(\frac{x-c_i}{a_i}\right)^{2b_i}\right) \qquad (2)$$
$$\mu_{A_i}(x) = \frac{1}{1+\left(\frac{x-c_i}{a_i}\right)^{2b_i}}$$

Where a_i ,b_i and c_iare the parameter set. Parameters in this layer are referred to as premise parameters.

Layer 2: The nodes in this layer are fixed and are labeled M, to indicate that they play the role of a simple multiplier. The outputs of these nodes are given by:

$$O_i^2(x,y) = w_i = \mu_{A_i}(x) \times \mu_{B_i}(y) \qquad (3)$$

where i=1,2. They are called firing strengths of the rules.

Layer 3: Every node in this layer is a circle node that is labeled N. The ith node calculates the ratio of the ith rule's firing strength to the sum of all rules' firing strengths:

$$O_i^3(x,y) = \bar{w}_i = \frac{w_i}{w_1+w_2} \qquad (4)$$

For convenience, outputs of this layer will be called normalized firing strengths.

Layer 4: In this layer, the nodes are adaptive nodes. The output of each node in this layer is simply the product of the normalized firing strength and a first order polynomial (for a first order Sugeno model). Two fuzzy if-then rules based on a first order Sugeno model are considered:

Rule 1: If (x is A_1) and (y is B_1) then ($f_1 = p_1 x + q_1 y + r_1$)

Rule 2: If (x is A_2) and (y is B_2) then ($f_2 = p_2 x + q_2 y + r_2$)

Then, the outputs of this layer are given by:

$$O_i^4(x,y) = \bar{w}_i f_i = \bar{w}_i(p_i x + q_i y + r_i) \qquad (5)$$

where i=1,2. Parameters in this layer will be referred to as consequent parameters.

Layer 5: The single node in this layer is circle node labeled ∑ that computes the overall output as the summation of all incoming signals, i.e.

$$O_i^5(x,y) = \sum_i \bar{w}_i f_i = \frac{\sum_i w_i f_i}{\sum_i w_i} \qquad (6)$$

Downloaded from bcn.iums.ac.ir at 22:07 CET on Friday February 20th 2015

It can be observed that there are two adaptive layers in this ANFIS architecture, namely the first layer and the fourth layer. In the first layer, there are three modifiable parameters {a_i,b_i,c_i}, which are related to the input membership functions. These parameters are the so-called premise parameters. In the fourth layer, there are also three modifiable parameters {p_i,q_i,r_i}, pertaining to the first order polynomial. These parameters are so-called consequent parameters.

2.3 Design Description

In this research, MATLAB software with an ANFIS box was used for creating an ANFIS. Choosing training data and testing them in different classifications and situations was performed to get the least number of mistakes on average. In fact, training data models that target the system and test the data use the extension ability of the fuzzy inference system. Every data collection that is loaded in the graphic connector ANFIS should be like a matrix such that inputs are as organized in it as vectors, except the last column. Outputs are put in the last column in this vector.

In the second stage, a primary FIS should be designed and calculated. The number and the kind of input/ output membership functions are chosen. In the FIS shown in Figure 3, there are 2 inputs and 1 output. Five disigmoid membership functions were chosen for each input which were defined by the difference between two of these sigmoid functions:

$$(7)\quad \mu_{A_i}(x) = \frac{1}{1+e^{-a_i(x-c_i)}} - \frac{1}{1+e^{-b_i(x-d_i)}}$$

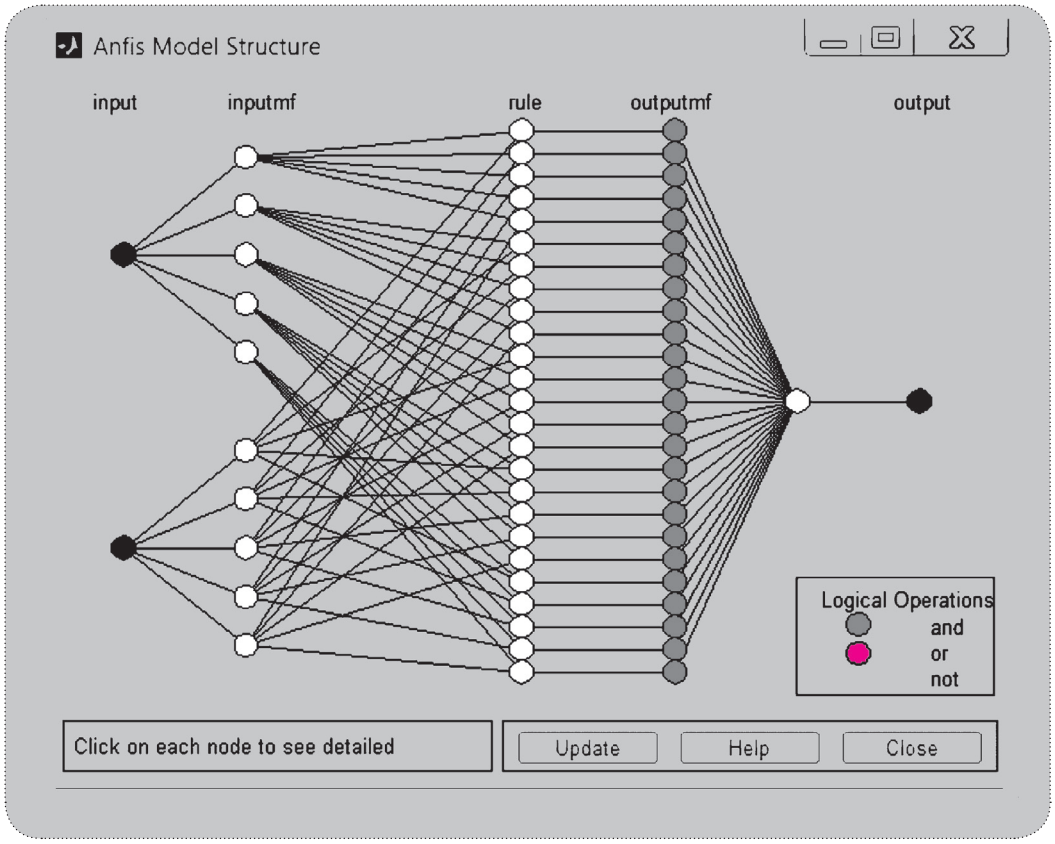

Figure 3. Primary structure of FIS.

Downloaded from bcn.iums.ac.ir at 22:07 CET on Friday February 20th 2015

The output is also linear. The two methods that can be used for optimizing ANFIS parameters for learning FIS are back-propagation and hybrid. Hybrid method-was used for system training. Eighty percent of data was used for training ANFIS and the other twenty percent for testing ANFIS.

In order to evaluate the accuracy of ANFIS we applied statistical criteria such as R-square, Pearson correlation coefficient and T-test by using SPSS software.

3. Result

The proposed technique involved training the ANFIS to determine the optimal dosage of sodium valproate when the features given in Table 1 were used as inputs. The Adaptive Neuro-Fuzzy Inference System design was modeled based on 33 IGE records. 7 records were used for testing the system. The training was done using the above system's data training. This study used hybrid methods for optimizing the parameters. This system can be regarded as a great step towards a more complete and accurate determination of the optimal dosage. The rate of the train's error was noted in each stage of the training process. The statistical characteristics related to training error after 1000 epochs are shown in Table 2.

Table 2. Statistical characteristics of training error after 1000 epochs.

Model	R-Square	Adjusted R-Square	Std. Error of the Estimate
ANFIS	0.839	0.834	59.00385

NEUROSCIENCE

The data which was used for testing system is shown in Figure 4. The observed optimal dosage versus the optimal dosage estimated by ANFIS with description of samples is shown in Table 3. The output of ANFIS is shown by an star (*) and the observed optimal dosage is shown by a plus icon (+).

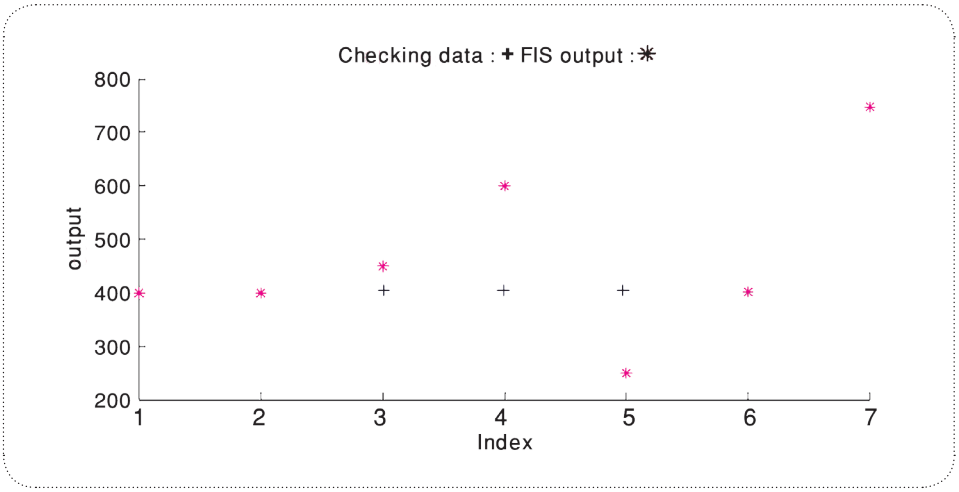

Figure 4. Observed optimal dosage versus ANFIS output.

NEUROSCIENCE

Table 3. The observed optimal dosage versus the optimal dosage estimated by ANFIS with description of samples.

The Age Of Onset	The Frequency Of Seizure Before Therapeutic Intervention	The Observed Optimal Dosage	The Optimal Dosage Estimated By Anfis
14	3	400	400.0145
15	1	400	400.1802
17	2	400	449.8552
14	1	400	599.8415
23	2	400	250.1890
16	2	400	401.9849
15	2	750	748.1777

NEUROSCIENCE

Downloaded from bcn.iums.ac.ir at 22:07 CET on Friday February 20th 2015

As it is shown in Table 3 just four observations are estimatedto be correct by ANFIS. Inclinical application, there is no difference between 400 and 450 so we can say the system has correctly estimated five observations. However, the accuracy of the proposed system is 0.598 which is shown in Table 4. Although these estimated dosages might not be optimal, they are nearoptimal (or suboptimal). Besides, by starting from suboptimaldosage, neurologists will sooner be able to reach the optimal dosage.Other statistical properties are given in Table 4. Figure 5 and Figure 6 show the final membership functions of the inputs (input 1: age of onset, input 2: frequency of seizure before therapeutic intervention), using the disigmoid membership function respectively. Pearson correlation coefficient between these two variables was significant ($P < 0.05$) and equal to 0.77, which indicates a positive linear relationship between the two variables (estimated and observed). Also, the T-test was not significant ($P > 0.05$) and showed that there is no difference between the mean of estimated and mean of observed.

Table 4. Statistical characteristics of testing error after 1000 epochs.

Model	R-Square	Adjusted R-Square	Std. Error of the Estimate
ANFIS	0.598	0.518	91.85420

NEUROSCIENCE

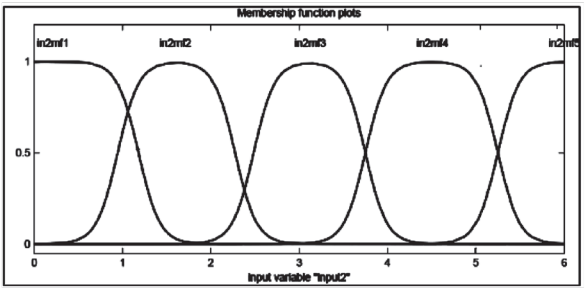

NEUROSCIENCE

Figure 5. Final membership function of input 2.

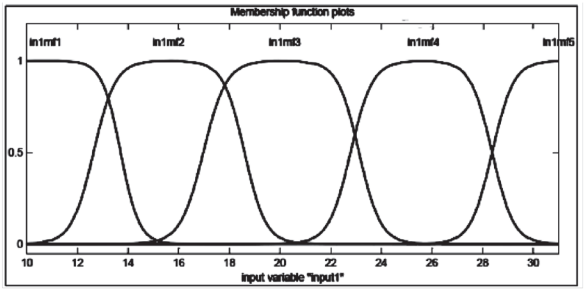

NEUROSCIENCE

Figure 6. Final membership function of input 1.

4. Discussion

This paper presented a new application of ANFIS for estimating the optimal dosage of sodium valproate in IGE patients. Fuzzy set theory plays an important role in dealing with uncertainty when making decisions in medical applications. Using fuzzy logic enabled us to use the uncertainty in the design of ANFIS and consequently to increase the credibility of the system output. Collectively, it seems that ANFIS has a high capacity to be applied in medical sciences especially neurology. The collection of well-distributed, sufficient, and accurately measured data is the basic requirement to obtain an accurate model. This system, as the first system for estimating the optimal dosage, is not as accurate as expected because the considered inputs were not the only factors related to specifying the optimal dosage and the collected datawas not big. However, it was as good as the neurologist expected to be applicable for treating the IGE patients with sodium valproate and it will become more accurate by making large amount of data for learning ANFIS. Based on literature, other factors related to the optimal dosage arelife style, duration of monotherapy, compliance, pharmacological factors and seizure's feature (e.g. how long they take, when they happen and how they happen) (Rowland et al., 2010). Thus, for a better estimation of optimal dosage, more data and more inputs should be applied.

5. Acknowledgment

We would like to thank Mashhad University School of Medicine, Neurology Department for their sincere cooperation.

Refrences

Aruna, P., Puviarasan, N., Palaniappan, B. (2003). Medical analysis and diagnosis using neuro-fuzzy model.Eleventh international conference an advanced computing and communication, PSG College of technology.

Baxt, W. G. (1990). Use of an artificial neuro- network for data analysis in clinical decision making: the diagnosis of acute coronary occlusion. Neural Computation, 2, 480–89.

Downloaded from bcn.iums.ac.ir at 22:07 CET on Friday February 20th 2015

Belal, S. Y., Taktak, A. F. G., Nevill, A. J., Spencer, S. A., Roden, D., Bevan, S. (2002). Automatic detection of distorted plethysmogram pulses in neonates and paediatric patients using an adaptive-network-based fuzzy inference system. Artificial intelligent in medicine, 24, 149–65.

Collaborative Group for the Study of Epilepsy. (1992). Prognosis of epilepsy in newly referred patients: a multicenter prospective study of the effects of monotherapy on the long-term course of epilepsy. Epilepsia, 33, 45-51.

Davis, R., Peters, D. H., Mctavish, D. (1994). Valproic acid: A reappraisal of its pharmacological properties and clinical efficacy in epilepsy. Drugs, 47, 332−72.

Delgado-escueta, A. V., Medina, M. T., Serratosa, J. M. (1999). Mapping and positional cloning of common idiopathic generalized epilepsies: juvenile myoclonus epilepsy and childhood absence epilepsy. Advanced in Neurology, 79, 351−74.

Dubois, D., Prade, H. (1998). An introduction to fuzzy systems. ClinicaChimicaActa, 270, 3–29.

Guez, A. R., Vincent, R. D., Avoli, M., Pineau, J. (2008). Adaptive treatment of epilepsy via batch-mode reinforcement learning, Proceedings of the twentieth innovative applications of artificial intelligence conference, 1671-78.

Guler, I., Ubeyli, E. D. (2003). Detection of ophthalmic artery stenosis by least mean squares back propagation neuro- network. Computer in Biomedical and Medicine, 33, 333–43.

Guler, I., Ubeyli, E. D. (2004). Application of adaptive neuro-fuzzy inference system for detection of electrocardiographic changes in patients with partial epilepsy using feature extraction.Expert Systems with Application, 27, 323–30.

Jang, J, S, R. (1993). ANFIS: Adaptive-network-based fuzzy inference system. IEEE Transcations on Systems, man & Cybernetics, 23, 665–85.

Kakar, M., Nystrom, H., Aarup, L. R., Nottrup, T. J., Olsen, D. R. (2005). Respiratory motion prediction by using the adaptive neuro fuzzy inference system.Physics in medicine and biology, 50, 4721–28.

KenarKoohi, A., Soleimanjahi, H., Falahi, S. h., Riahi, M. H., Meshkat, Z. (2011). The application of the new intelligent adaptive nero fuzzy inference system in prediction of human papilloma virus oncogenicity potency. Arak Medical University Journal, 13, 95-105.

Kuncheva, L. I., Steimann, F. (1999). Fuzzy diagnosis.Artificial intelligent in medicine, 16, 121–28.

Milton, J. (2010). Epilepsy as a dynamic disease: a tutorial of the past with an eye to the future. Epilepsy & behavior,18, 33–44.

Nauck, D., Kruse, R. (1999). Obtaining interpretable fuzzy classification rules from medical data.Artificial intelligent in medicine, 16, 149–69.

Pocock, N. (2006). Review evidence for tolerance to antiepileptic drugs. Epilepsia, 47, 1253-84.

Rowland, L. P., Pedley, T. A., Merritt, H. H. (2010). Merritt's neurology (12th ed.). Philadelphia, PA: Wolters Kluwer Health/Lippincott: Williams & Wilkins.

Schmidt, D. (2009). Drug treatment of epilepsy: options and limitations. Epilepsy & behavior, 15, 56-65.

Shahbazikhah, P., Asadollahi-Baboli, M., Khaksar, R., Fareghi-Alamdari, R., Zare-Shahabadi, V. (2011). Predicting partition coefficients of migrants in food simulant/polymer systems using adaptive neuro-fuzzy inference system.Journalof the Brazilian Chemical Society, 22, 1446-51.

Ubeyli, E. D. (2008). Adaptive neuro-fuzzy inference system employing wavelet coefficients for detection of ophthalmic arterial disorders.Expert Systems with Application, 34, 2201–09.

Ubeyli, E. D., Guler, I. (2003). Neural network analysis of internal carotid arterial Doppler signals: Predictions of stenosis and occlusion. Expert Systems with Application, 25, 1–13.

Ubeyli, E. D., Guler, I. (2005a). Automatic detection of erythemato-squamous diseases using adaptive neuro-fuzzy inference systems.Computer in Biomedical and Medicine, 35, 421–33.

Ubeyli, E. D., Guler, I. (2005b). Adaptive neuro-fuzzy inference systems for analysis of internal carotid arterial Doppler signals.Computer in Biomedical and Medicine, 35, 687-702.

Usher, J., Campbell, D., Vohra, J., Cameron, J. (1999). A fuzzy logic-controlled classifier for use in implantable cardioverter defibrillators.Pacing ClinElectrophysiol, 22, 183–86.

Villarreal, H. J., Wilder, B. J., Willmore, L. (1978). Effect of valproic acid on spike and wave discharges in patients with absence seizures.Neurology, 28, 886−91.

Virant-Klun, I., Virant, J. (1999). Fuzzy logic alternative for analysis in the biomedical sciences.Computation Biology Research, 32, 30